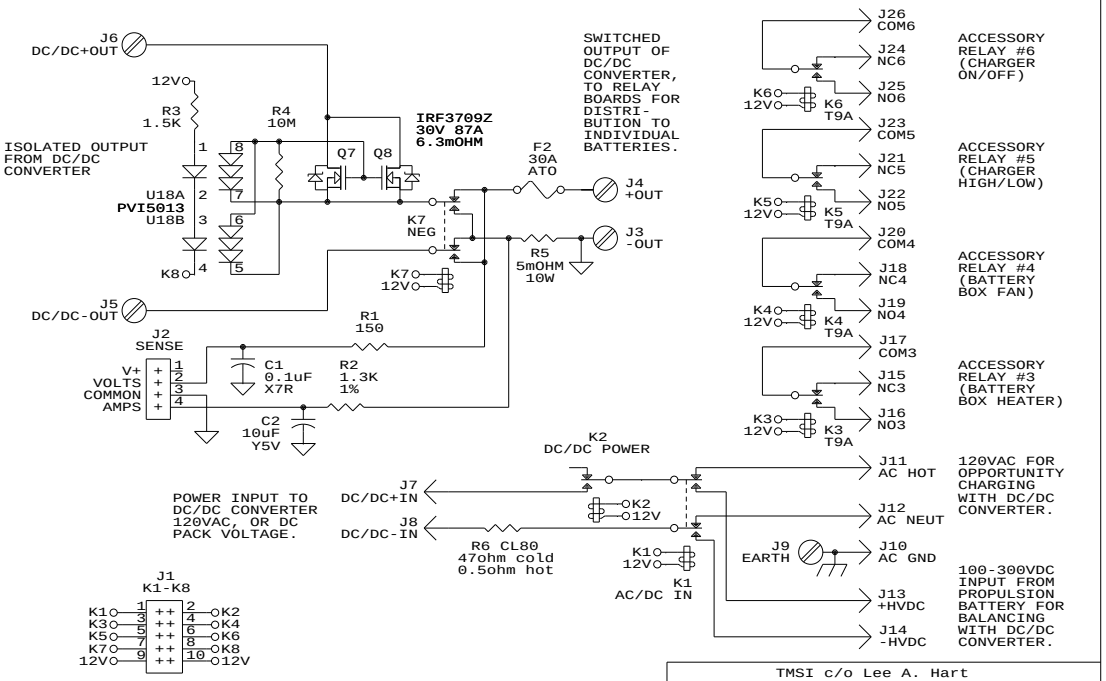

1. Unused C3+,Q1-6,Q9+,R7+,J27+.
2. ALL RELAYS SHOWN IN DE-ENERGIZED POSITION.
3. ALL RESISTORS 5% 1/4W UNLESS OTHERWISE NOTED.
4. K2-K6 ARE P&B T9AS5D12-12, COIL 12vdc 83mA, SPDT 15A.
5. K1 AND K7 ARE P&B T92S11D12-12, COIL 12vdc 140mA, DPDT 30A.

TMSI c/o Lee A. Hart

814 8th Ave N
Sartell, MN 56377
(320) 656-9574
leeahart@earthlink.net

Title
BATTERY BALANCER - POWER BOARD

Size	Document Number	REV
A	POWER.SCH (C) 2010 by TMSI	A

Date: January 9, 2010 Sheet 1 of 1