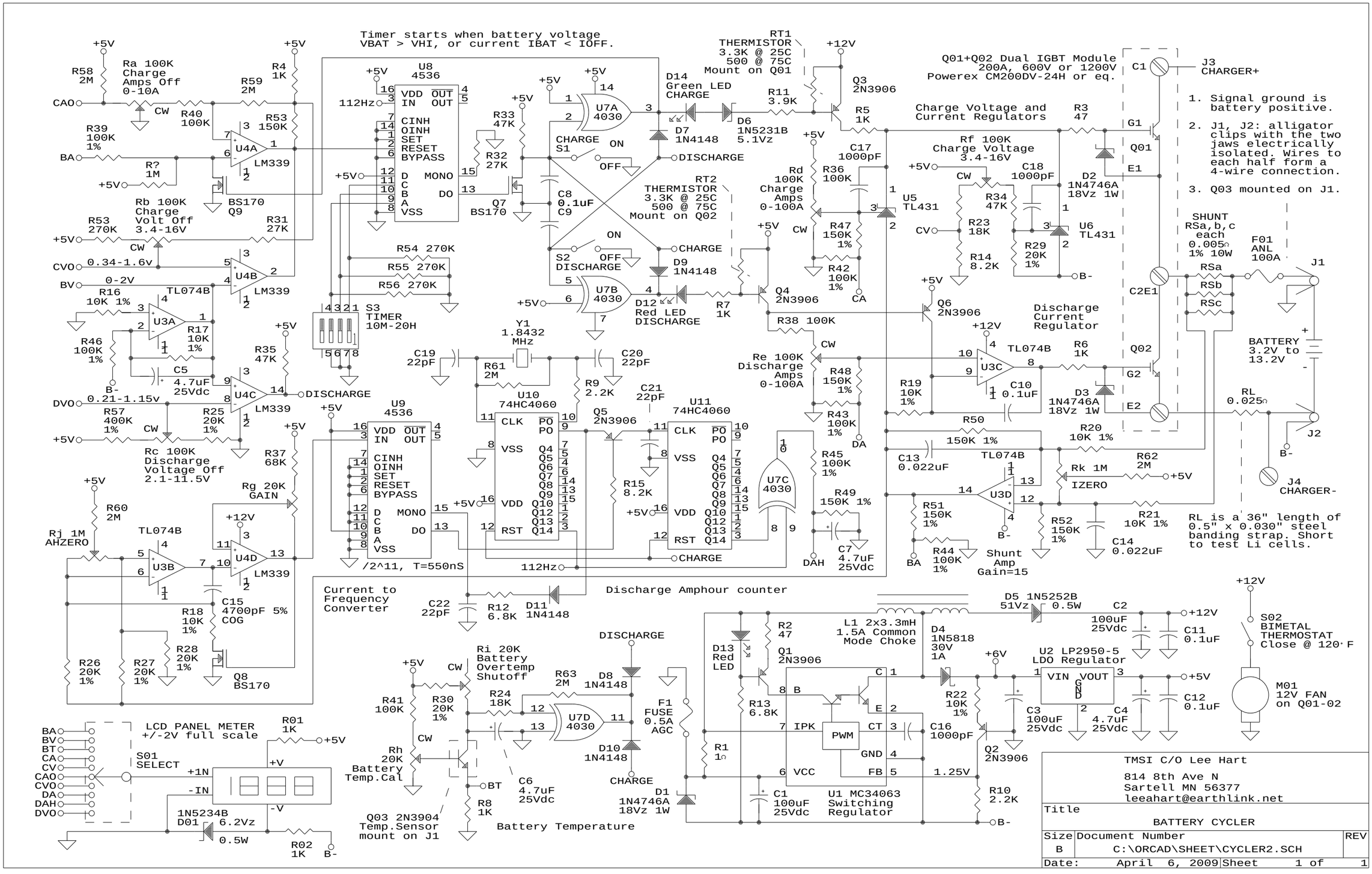
Timer starts when battery voltage VBAT > VHI, or current IBAT < IOFF.
Q01+Q02 Dual IGBT Module 200A, 600V or 1200V Powerex CM200DV-24H or eq.
1. Signal ground is battery positive.
2. J1, J2: alligator clips with the two jaws electrically isolated. Wires to each half form a 4-wire connection.
3. Q03 mounted on J1.
RL is a 36" length of 0.5" x 0.030" steel banding strap. Short to test Li cells.
Charge Voltage and Current Regulators
Discharge Current Regulator
Shunt Amp Gain=15
Discharge Amphour counter
Current to Frequency Converter
Battery Temperature
LCD PANEL METER +/-2V full scale
TMSI C/O Lee Hart
814 8th Ave N
Sartell MN 56377
leeahart@earthlink.net
Title
BATTERY CYCLER
Size B
Document Number
C:\ORCAD\SHEET\CYCLER2.SCH
REV
Date: April 6, 2009
Sheet 1 of 1